United States Patent [19]

Grollimund et al.

[11] **Patent Number: 4,911,374**

[45] **Date of Patent: Mar. 27, 1990**

[54] **SYSTEM AND METHOD FOR USE IN DELAMINATING BOBBINS OF PAPER MATERIAL**

[75] Inventors: **Everett C. Grollimund**, Midlothian; **Donald L. Brookman**; **Steven F. Spiers**, both of Richmond, all of Va.

[73] Assignee: **Philip Morris Incorporated**, New York, N.Y.

[21] Appl. No.: **306,998**

[22] Filed: **Feb. 6, 1989**

Related U.S. Application Data

[62] Division of Ser. No. 820,665, Jan. 21, 1986, Pat. No. 4,821,972.

[51] **Int. Cl.**[4] **B65H 35/00**

[52] **U.S. Cl.** ..... **242/56 R**

[58] **Field of Search** ..... 242/58, 56 R, 78.8, 242/58.4; 83/191, 154, 152, 338, 341

[56] **References Cited**

U.S. PATENT DOCUMENTS

4,688,736 8/1987 Brinker et al. ..... 242/78.8 X

Primary Examiner—David Werner

Attorney, Agent, or Firm—Wayne M. Kennard

[57] **ABSTRACT**

A system and method for handling and delaminating a bobbin of sheet-like material, such as tipping paper, comprising a delaminator apparatus (100), a robotic arm assembly (182) having a robotic hand (185) connected thereto and a control console (212) for controlling the delaminator apparatus (100), the robotic arm assembly (182) and robotic hand (185) connected to the robotic arm assembly (182).

6 Claims, 11 Drawing Sheets

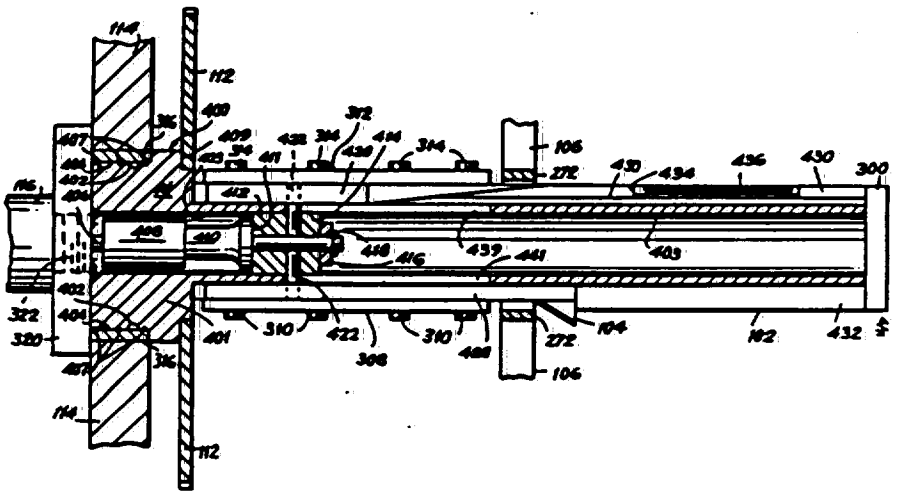

2021343062

Source: https://www.industrydocuments.ucsf.edu/docs/nhll0000